Exercise 6

For the Bachelor of Science course Digital Circuits.

1. Include a synchronous clear input to the register circuit of Figure 1. The modified register will have a parallel load capability and a synchronous clear capability. The register is cleared synchronously when the clock goes through a positive transition and the clear input is equal 1.

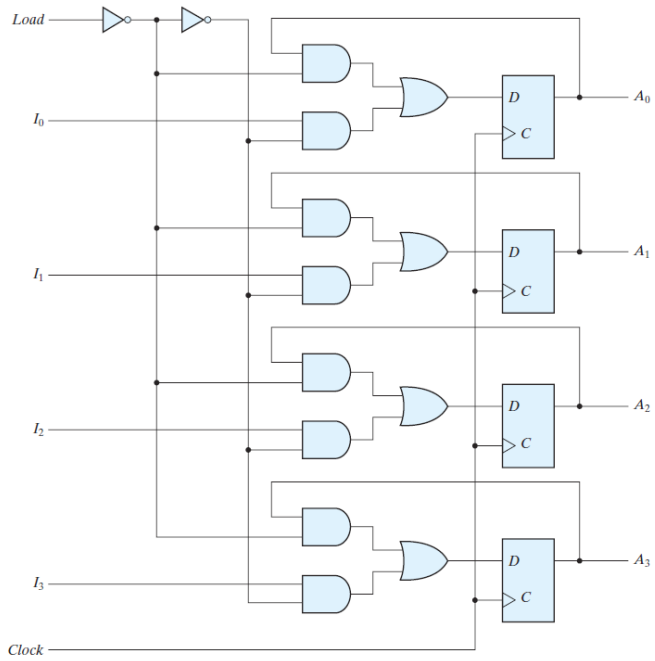

Figure 1: Four-bit register with parallel load

2. The content of a four-bit register is initially the 4-bit word 1010. The register is shifted six times to the right with the serial input being 1011001. What is the content of the register after each shift.
3. Draw the logic diagram of a 4-bit register with four D flip-flops and four 4×1 multiplexers with mode selection inputs S_1 and S_0. The register operates according to the following function table.

s_1	s_0	Register Operation
0	0	No change
1	0	Complement the four outputs
0	1	Clear register to 0 (synchronous with the clock)
1	1	Load parallel data

4. Design a serial 2's complementer with a shift register and a flip flop. The binary number is shifted out from one side and its 2's complement shifted into the the other side of the shift register.
5. Show that BCD ripple counter can be constructed using a four-bit binary ripple counter with asynchronous clear and a NAND gate that detects the occurance of count 1010.